(COMPRESSOR DRAWING)

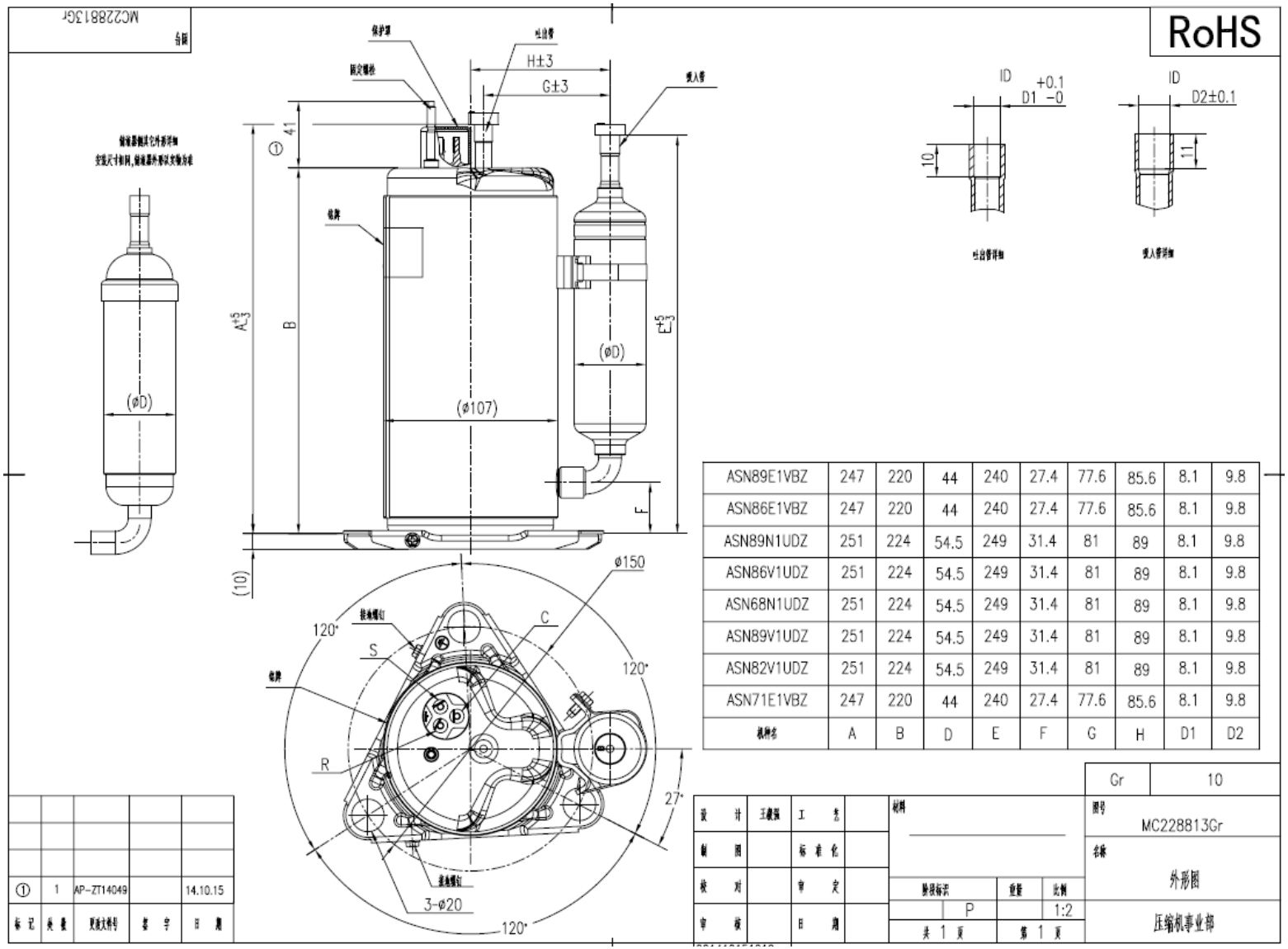

ASN89E1VBZ	247	220	44	240	27.4	77.6	85.6	8.1	9.8
ASN86E1VBZ	247	220	44	240	27.4	77.6	85.6	8.1	9.8
ASN89N1UDZ	251	224	54.5	249	31.4	81	89	8.1	9.8
ASN86V1UDZ	251	224	54.5	249	31.4	81	89	8.1	9.8
ASN68N1UDZ	251	224	54.5	249	31.4	81	89	8.1	9.8
ASN89V1UDZ	251	224	54.5	249	31.4	81	89	8.1	9.8
ASN82V1UDZ	251	224	54.5	249	31.4	81	89	8.1	9.8
ASN71E1VBZ	247	220	44	240	27.4	77.6	85.6	8.1	9.8
机种名	A	B	D	E	F	G	H	D1	D2